SONAC® 220

DATA SHEET

Motion & Position
Bulk Level

FUNCTION

Single Point Switch for on-off control of bulk solids.
On-off switch presence/absence, indication of objects.

TYPICAL USES

HighLevel Alarm or Control
Plugged Chute Detection
Conveyor Control
Flow/No Flow Detection
Web Break Detection
Truck and R.R. Position
LowLevel Alarm or Control

PRIMARY AREAS OF APPLICATION

Where material to be sensed constantly changes physical properties, eg: Municipal Solid Waste. Reliable sensing does not depend on any specific physical or electrical characteristics of the material.

Low bulk density materials
Eg: Textile fibers, onion skins, popcorn, styrofoam pellets, puffed cereals. This sensing technique permits sensing products which are so light that they cannot be reliably sensed by other means. Reliably senses products with bulk densities of less than 1/4 lb./cubic foot.

Stringy, fibrous materials
Eg: Yarn, chipped fibers, waste paper, trash. Sensor is mounted flush with bin wall to prevent material build-up at sensing point. No moving parts to catch fibers.

Delicate materials
Eg: Puffed cereals, potato chips. Nothing projects into falling product to crush it, no motion of sensor to fracture fragile products.

Abrasive materials
Eg: Crushed coal, sand, ore. Rugged construction. No moving parts. Hermetically sealed sensors do not protrude into flow stream.

Hot materials
Series 14 sensors are designed for continuous operation at 400°F (+205°C).

Small hoppers
Nothing protrudes into hopper to obstruct flow.

FEATURES

- Vibration resistant
  The rugged magnetostrictive sensors are designed to tolerate sustained shock and vibration. The control unit is designed for remote mounting away from the vibrating equipment.
- Independent time delays
  Delay on make or delay on break contact adjustments are non-interacting and independent.
- Corrosion resistant, watertight enclosure
  Glass-reinforced polyester enclosure features captive hardware and stainless steel trim to endure the most corrosive environments.
- Versatile power supply
  The standard units accepts 115 Volts AC, 230 Volts AC or low voltage 24 DC input power.
- Self-Test
  The Sonac 220 is equipped with a self test circuit. Pressing the momentary switch located on the far right of the board will activate it. An optional external switch is also available.

PRINCIPLE OF OPERATION

A pair of matched sensors is connected to an amplifier as a receiver (microphone) and a transmitter (loudspeaker). When the amplifier gain is increased to the point where its gain exceeds the loss in the acoustic path between the sensors, oscillation (feedback) occurs. An object entering the acoustic path increases the loss and the oscillation decreases.

In the Sonac® system, one sensor is connected to the Sonac® amplifier and operates essentially as a loudspeaker. This transmitting sensor will produce ultrasonic sound waves of the frequency dictated by the sensors themselves. The other sensor which we will call the receiving sensor is connected to the amplifier as a microphone and will deliver to the amplifier electrical energy from ultrasonic sounds reaching its diaphragm. The amplifier itself is capable of amplifying the weak sounds received by the receiving sensor more than 1,000,000 times.

The Sonac® sensors are, by design, quite directional in their response to sound waves. If the transmitting and receiving sensors are positioned facing each other and the path between the two sensors is unobstructed and the electrical gain in the amplifier is sufficient to overcome the losses in sound energy across the path between the two sensors, acoustic feedback will occur. This, of course, cannot be heard, as Sonac® is designed to operate near 38,000 Hz. This is well above the range of human hearing.

When the acoustic characteristics of the air path are changed by variations in temperature, relative humidity, or standing wave conditions, then the Sonac® system merely adjusts itself to some new frequency which is optimum for the present path conditions. In every case the actual frequency of the acoustic feedback in the Sonac® path is whatever frequency will produce the least loss across the path. In actual operation, this change in frequency is limited by the electrical characteristics of the amplifier and the acoustic properties of the sensors.

SPECIFICATIONS

Input Voltage	NOMINAL 115 Volts AC 230 Volts AC 24 Volts DC	ABSOLUTE LIMITS 95-135 Volts AC 180-270 Volts AC 21-28 Volts
Power	4VA volt amperes	
Frequency, AC Power	50-60 Hz	
Time Delay	Independent with Auto Reset on make, on break	
Delay Time Range	50 milliseconds min. 10 seconds nominal 30 seconds max.	
Fail-Safe	Switch selectable - High Level or Low Level High Level Fail-safe Position: Relay is de-energized when material is present Low Level Fail-safe Position: Relay is de-energized when material is not present	
Indicators	Two, light emitting diodes (LED) YELLOW - illuminated when relay is energized RED - illuminated when material is present at sensor	
Operating Temperature	-40°F to +160°F (-40°C to +71°C)	
Output	Relay, 2 Form C contacts DPDT	
Ratings	5 amp @ 120 Volts AC Non-inductive 3 amp @ 240 Volts AC Non-inductive 3 amp @ 24 Volts DC Non-inductive	
Maximum Cable Length	PVC - 50 feet (15.24M) Teflon - 30 feet (9.14M)	
Shipping Weight	Control Unit - 5 pounds (2.25 kilograms) Sensor - 1.5 pounds (0.68 kilograms) Cable - 0.5 pounds (0.45 kilogram)	

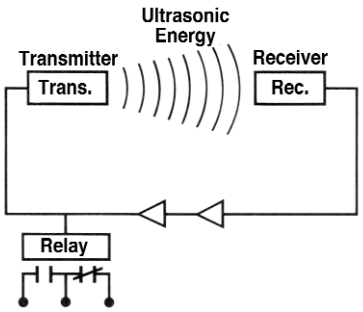

Cutaway Showing Sensor in Mounting Fittings

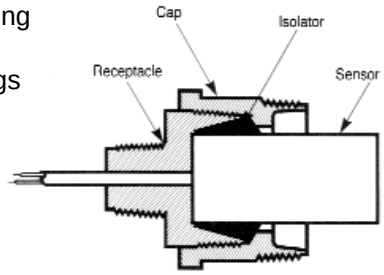

Sensor Typical Cross Section

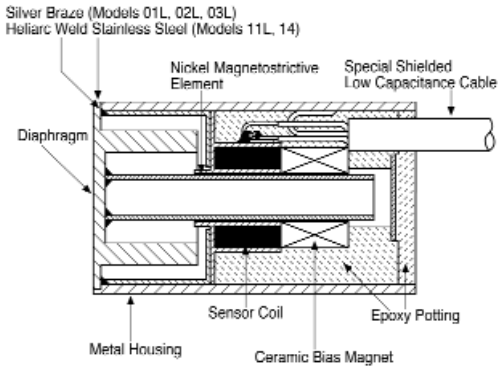

Sensors
Transmitters and Receivers
Sensors are supplied as matched pairs

Model No.	Transmitting Angle	Description	Typical Applications
Corrosion Resistant Sensor Face - 316 Stainless Steel 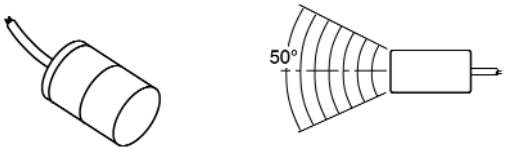 11L		50 ft. PVC cable standard. 10 ft. max. sound path. Temp. range from -65°F to +220°F (-54°C to +104°C) Minimum Distance - 2 inches* Maximum Distance - 12 feet* *depending on process material Keep at least 18 inches (457.2 mm) between adjacent sensors.	Bin Level Control Food Products Corrosive Products
High Temperature Sensor Face - 316 Stainless Steel 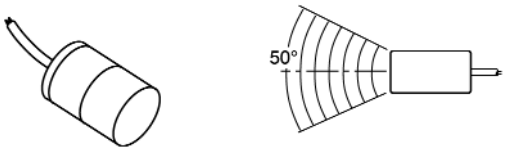 14		Sensor temperature range -65°F to +400°F (-54°C to +205°C). 15 ft. Teflon cables are standard. For high temperature applications use Part #31308-3 fitting. Minimum Distance - 2 inches* Maximum Distance - 12 feet* *depending on process material Keep at least 18 inches (457.2 mm) between adjacent sensors	Dry Level Control Webb Break

Bin-Wall Fittings

P/N	Temperature Limit	Material	Mounting Thread	Conduit Thread	Description
Standard	220°F (+140°C)	Glass Filled Nylon®	2” NPTM	3/4 NPTM	General Purpose
High-Temp.	400°F (+205°C)	Ryton®	2” NPTM	3/4 NPTM	High Temperature
Food-Grade	220°F (+140°C)	316 Stainless Steel		3/4 NPTM	Food-Grade

Bin Wall Fitting Installation
USDA Approved for Sanitary Service

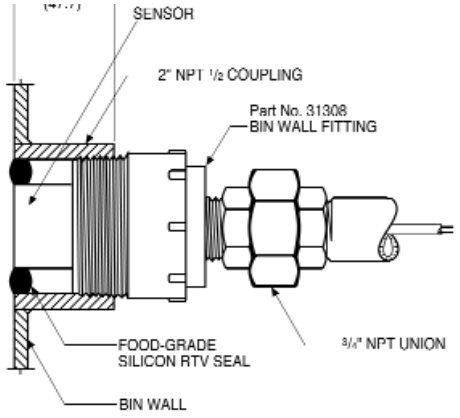

Installation Drawing

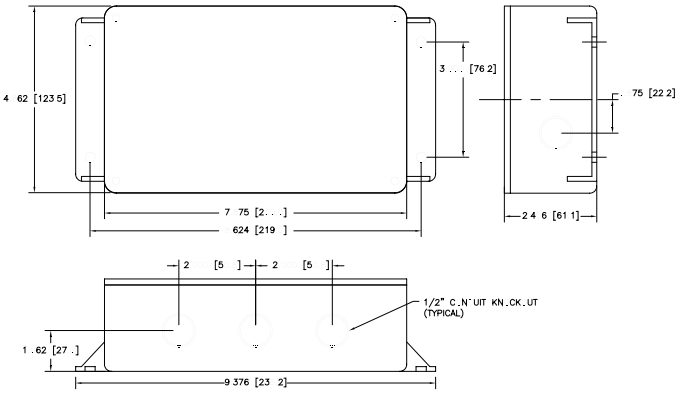

NOTE: DIMENSIONS IN PARENTHESES DENOTE MILLIMETERS

TIME DELAY SETTINGS

Bin Level Control
Normally requires both time delays to insure that a turbulence upper level will not cause a false trip. Clockwise rotation of Beam Make and Beam Break increases time delay.

Plugged Chute Control
Applications will normally have a delay on Beam Break so that falling material will not trip the control relay prematurely.

Starvation Control
Applications require delay on Beam Make so that when product ceases to flow (starvation) the relay will not operate until some reasonable time period has elapsed. This prevents false signals due to temporary reduction in flow.

Object Detection Control
Such as vehicle washing equipment, require about 1/2 second delay on Beam Make and Beam Break to prevent false signals.

General Comments
Always use as much time delay as the application will permit. These time delay adjustments permit custom application of the SONAC®/220 system to your specific process needs.

SENSORS

SONAC® sensors are ruggedly constructed and hermetically sealed for dependable service and unlimited life under the most adverse operating conditions. SONAC® magnetostrictive transducers are provided in matched pairs. Thus, one acting as a transmitter operates efficiently only with its matched receiver. The matched sensors are identical in construction and act as either transmitter or receiver according to the way they are wired to the control unit.

CUSTOMER CONNECTIONS

SONAC/220

GND.	NEUT	115 VAC	230VAC	NC	C	NO	NC	C	NO	BLACK	WHITE	SHIELD	SPARE	SPARE	+	−	SHIELD	WHITE	BLACK
				RELAY CONTACTS						SENSOR TRANS					LOW VOLT INPUT		SENSOR REC		
1	2	3	4	5	6	7	8	9	10	11	12	13	14	15	16	17	18	19	20

ORDERING INFORMATION

SONAC®

220- ____ - _____ - _____

Process Mounting (Priced per Pair)
S = Standard, Nylon 2 inch NPT 220°F max.
H = High Temp. Ryton 2 inch NPT 400°F max.
F = Food Grade, 304 Stainless Steel Sanitary Coupling
R = Rear Mount 3/4 inch NPT

Sensors (Priced per Pair)
11L = 316 Stainless Steel Face w/50 ft. Cable
14 = High Temp. 316 Stainless Steel Face w/15 ft. Cable per Sensor, 400° max.

Enclosure Options
S = Standard, NEMA 4x enclosure
O = OEM, Electronic Assembly with Mounting Hardware (No Enclosure)
C = Clear Cover NEMA 4X Enclosure
T = Standard, NEMA 4x Enclosure external Self-test option.
D = Clear cover, NEMA 4x Enclosure external Self-test option.

Model Sonac® 220 Ultrasonic Bulk Level Switch

NOTE: If multiple systems are used in the same vessel, please specify "Frequency Separation."

CSA Approved for Class II, Groups E, F, G; Divisions 1 Hazardous Locations

DELAVAN Process Instrumentation
an L&J TECHNOLOGIES Company
5911 Butterfield Road
Hillside, IL 60162
Ph: (708) 236-6000
Fax: (708) 236-6006
Email:sales@ljtechnologies.com